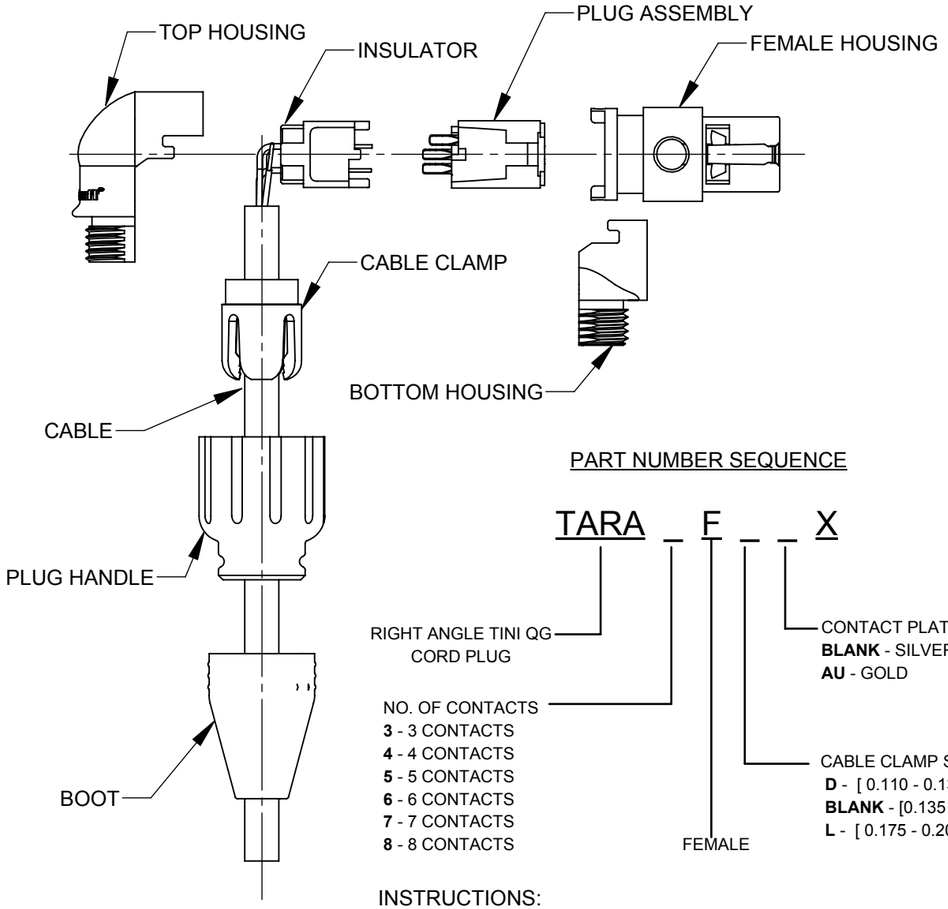

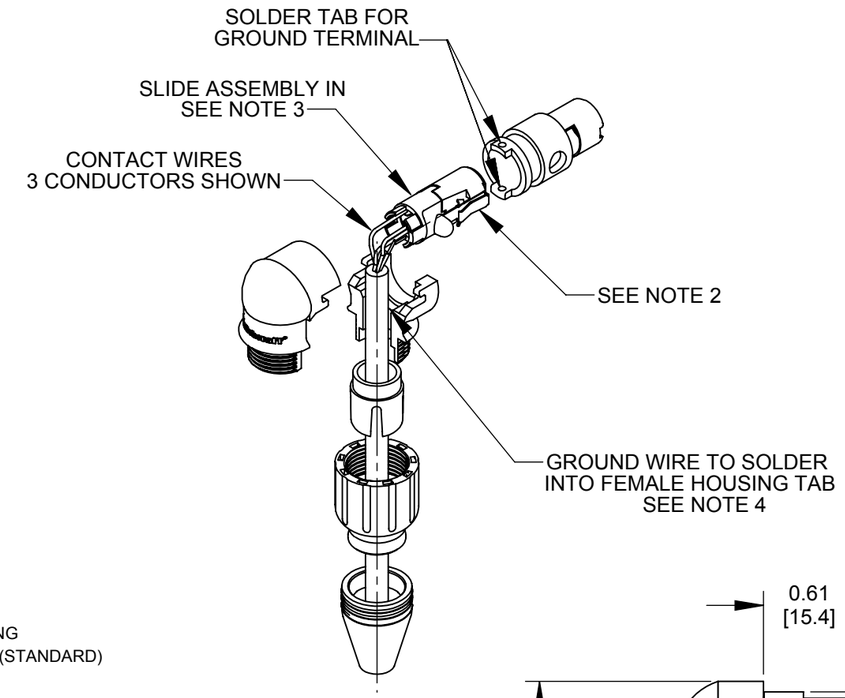

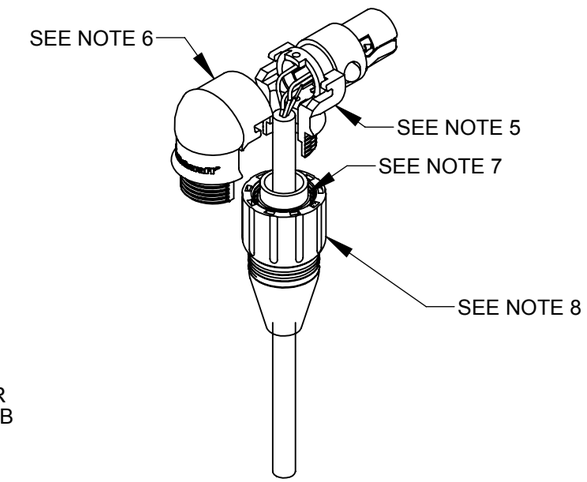

PART NUMBER SEQUENCE

TARA _ F _ _ X

- TARA: RIGHT ANGLE TINI QG CORD PLUG
- _: NO. OF CONTACTS
  - **3** - 3 CONTACTS
  - **4** - 4 CONTACTS
  - **5** - 5 CONTACTS
  - **6** - 6 CONTACTS
  - **7** - 7 CONTACTS
  - **8** - 8 CONTACTS
- F: FEMALE
- _: CABLE CLAMP SIZE (CABLE RANGE)
  - **D** - [0.110 - 0.135]
  - **BLANK** - [0.135 - 0.175]
  - **L** - [0.175 - 0.205]
- X: CONTACT PLATING
  - **BLANK** - SILVER (STANDARD)
  - **AU** - GOLD

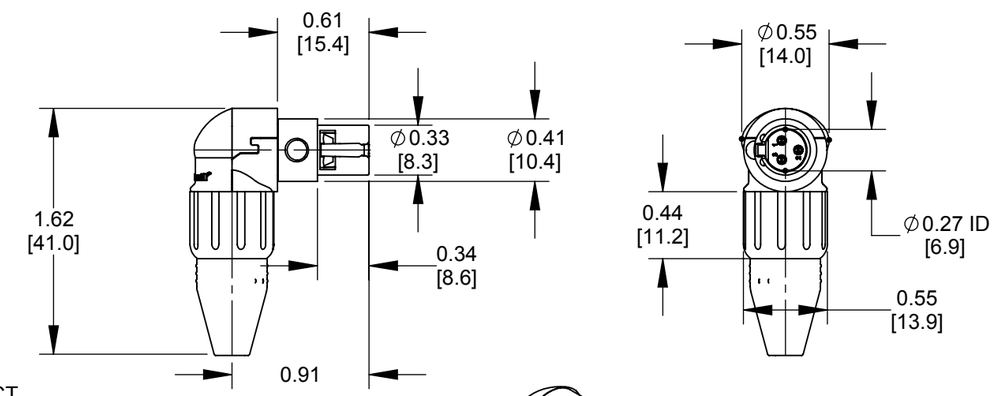

INSTRUCTIONS:

1) CUT THE WIRES ACCORDINGLY AS SHOWN ABOVE.
2) RUN IT THROUGH INSULATOR AND SOLDER THE CONTACT WIRES TO THE PLUG ASSEMBLY. CONNECT THE INSULATOR TO THE PLUG ASSEMBLY.
   THE CONTACTS IN THE PLUG ASSEMBLY CAN WITHSTAND 2.0 LBS PULL OUT FORCE.
3) NOW SLIDE THE CONNECTED PLUG ASEMBLY, INSULATOR INTO THE TINI QG HOUSING. MAKE SURE THAT THE PLUG ASSEMBLY IS BUTTED UP AGAINST THE FRONT OF THE TINI QG HOUSING.
4) SOLDER THE GROUND TERMINAL WIRE TO THE TINI QG HOUSINGS'S LOWER THRU HOLE AS SHOWN.
5) SLIDE THE BOTTOM PLASTIC HOUSING UP TOWARDS THE FEMALE HOUSING. THIS HOUSING CAN BE INSTALLED 90° ORIENTATED OTHER WAY IF PREFERRED.
6) DROP AND SLIDE THE TOP RIGHT ANGLE HOUSING INTO THE GROVE SUCH AS IT LATCHES WITH THE BOTTOM PLASTIC AND FEMALE HOUSING.
7) SLIDE THE CABLE CLAMP THROUGH THE CABLE INTO THE TOP/BOT HOUSINGS AS SHOWN.
8) SCREW THE PLUG HANDLE TO 3 IN-LB MAX AND POP IN THE BOOT TO ASSEMBLE FULL PRODUCT.

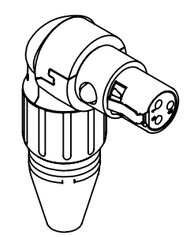

CUSTOMER DRAWING

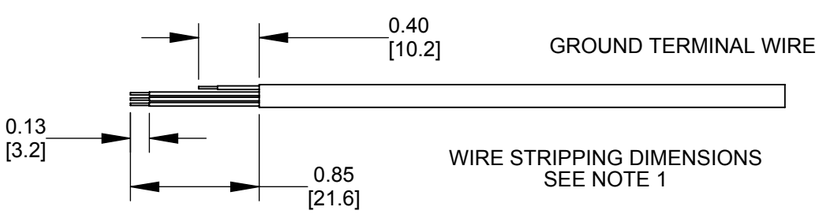

REV	ECO NUMBER	DATE	BY	APVD
0D	ADDED DIMENSIONS LAYOUT CHANGED	09/18/18	AM	*
0C	ADDED PART NUMBERING SEQUENCE	09/25/17	AM	*
0B	EDITED LAYOUT	01/03/17	AM	*

REVISIONS

☆ STAR SYMBOL DENOTES CRITICAL DIMENSION

UNLESS OTHERWISE SPECIFIED
1. ALL DIMENSIONS IN INCHES
   - TWO PLACE DECIMALS ±0.01
   - THREE PLACE DECIMALS ±0.005
   - ANGLES ±1°
   - ALL DIA. CONCENTRIC WITHIN 0.005 T.I.R.
2. FEATURES ON THE SAME CENTERLINE MUST BE ALIGNED WITHIN ±0.002
3. REMOVE ALL BURRS

DO NOT SCALE DRAWING

THIS DRAWING DESCRIBES A DESIGN CONSIDERED PROPRIETARY IN NATURE, DEVELOPED AND MANUFACTURED BY SWITCHCRAFT INC. AND IS RELEASED ON A CONFIDENTIAL BASIS FOR IDENTIFICATION PURPOSES ONLY.

SIZE	WIDTH	MULT	LBS/M	TEMPER
*	*	*	*	*

FINISH *
SPEC No. *
MATERIAL *
SPEC No. *

FIRST USED ON	SCALE
*	1:1

DATE DRAWN	BY	CHKD	APVD
07/27/16	AM	* *	* *

Switchcraft®

SHEET 1 OF 1

NAME: TINI QG, FEMALE RA RoHS

PART No.: TARA_FX SERIES_CD

REV: 0D

SolidWorks CAD File B

ROUTING 146 112