MATERIALS

1 - BODY - BRASS - BRIGHT NI. - PLATE.
2 - INSULATOR - PAPER BASE PHENOLIC.
3 - CORD PROTECTOR SLEEVE - MUSIC WIRE - TINNED.
4 - EYELET - BRASS - HOT TINNED.
5 - SET SCREW - STEEL - NI. - PLATE.

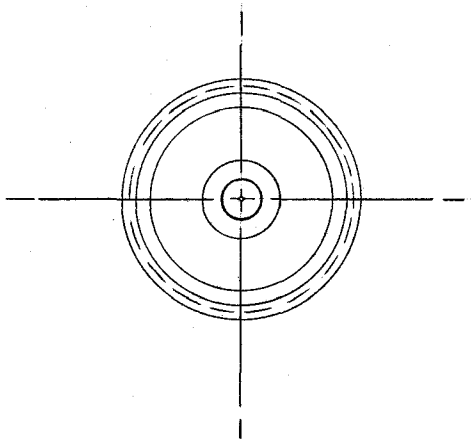

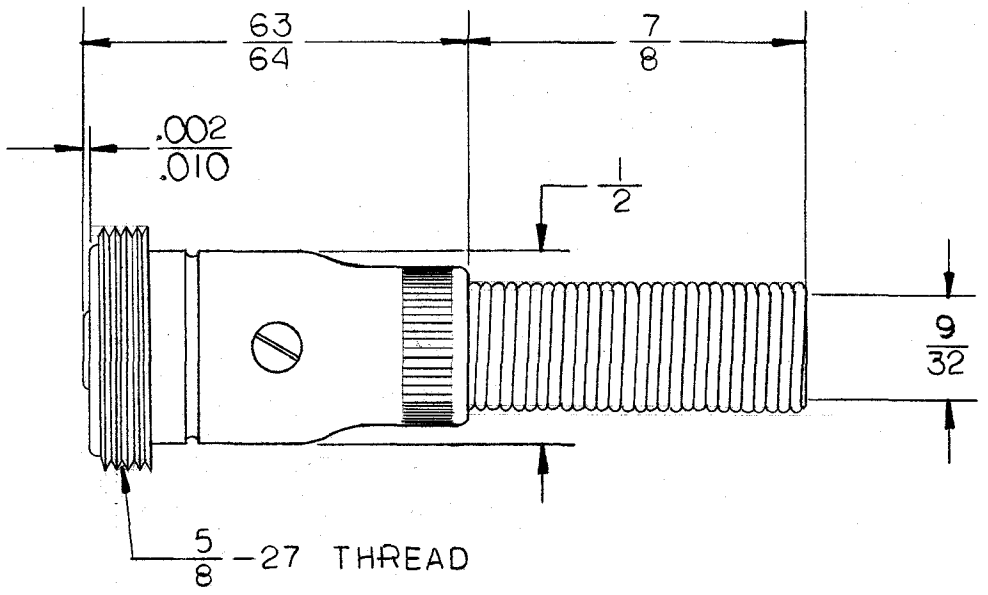

☆ STAR SYMBOL DENOTES CRITICAL DIMENSION, SEE S/C ENGINEERING STANDARD ES-0001.

SIZE	WIDTH	MULT.	LBS. PER M	TEMPER

DATE	BY	REVISION	SYM	ISS
1-22-91	VL	REDRAWN ECO 16414		A

THIS DRAWING DESCRIBES A DESIGN CONSIDERED PROPRIETARY IN NATURE, DEVELOPED AND MANUFACTURED BY SWITCHCRAFT, INC., AND IS RELEASED ON A CONFIDENTIAL BASIS FOR IDENTIFICATION PURPOSE ONLY.

UNLESS OTHERWISE SPECIFIED:

1 - DECIMAL DIMENSIONS ± .005
2 - FRACTIONAL DIMENSIONS ± 1/64
3 - ANGLES ± 1/2°
4 - ALL DIA'S CONCENTRIC WITHIN .005 T.I.R.
5 - ALL DIMENSIONS IN INCHES
6 - FOR THREADS USE UNIFIED PLUG AND RING GAGES ONLY.
7 - REMOVE ALL BURRS.
8 - PART TO BE FABRICATED AS SPECIFIED. MAKE NO DIMENSIONAL ALLOWANCES FOR APPLIED FINISHES, I.E., PLATING, PAINTING, ETC.
9 - HOLES ON SAME CENTERLINE MUST BE ALIGNED WITHIN ± .002

DO NOT SCALE DRAWING

DRAWN BY H C J	DATE 12-29-75	FINISH
CHECKED BY W.H.	DATE 12-31-75	PER FINISH SPEC. NO.
APPROVED BY	DATE	MATERIAL
SCALE (2X)		PER MAT. SPEC. NO.
FIRST USED ON		SWITCHCRAFT
NAME SINGLE CONTACT MICROPHONE CONNECTOR MALE TYPE	PART NO. 2501M	ISSUE A
	SHEET OF	

ROUTING 112 116

PAXTON